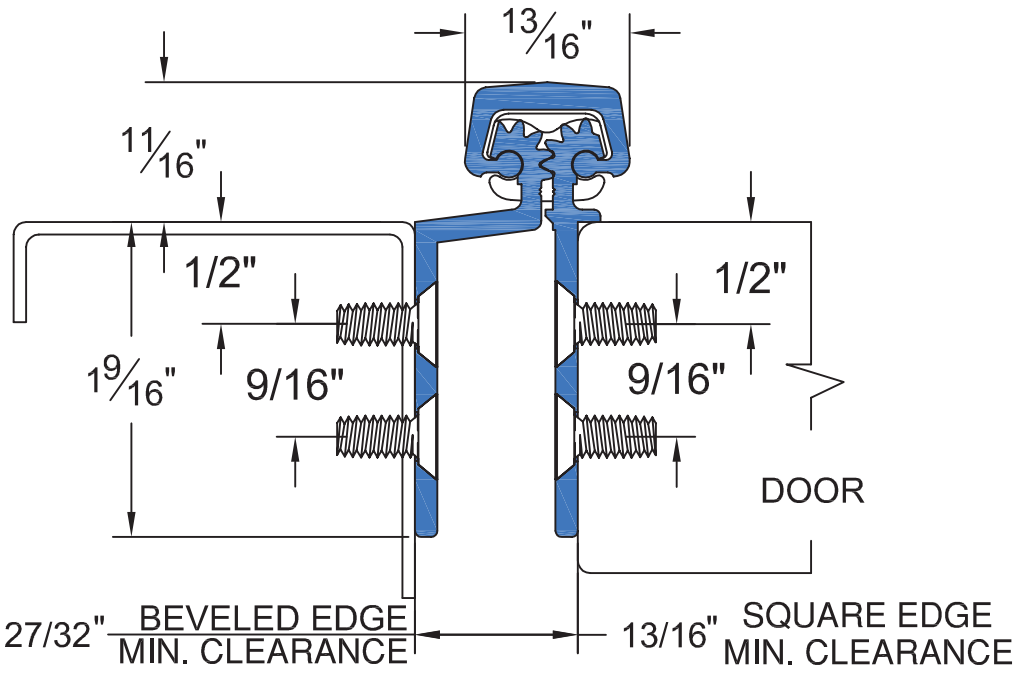

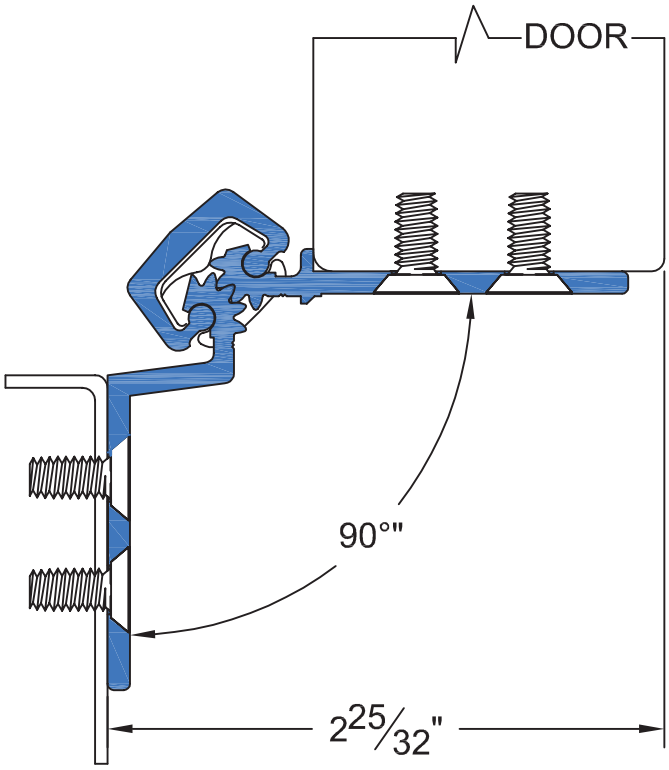

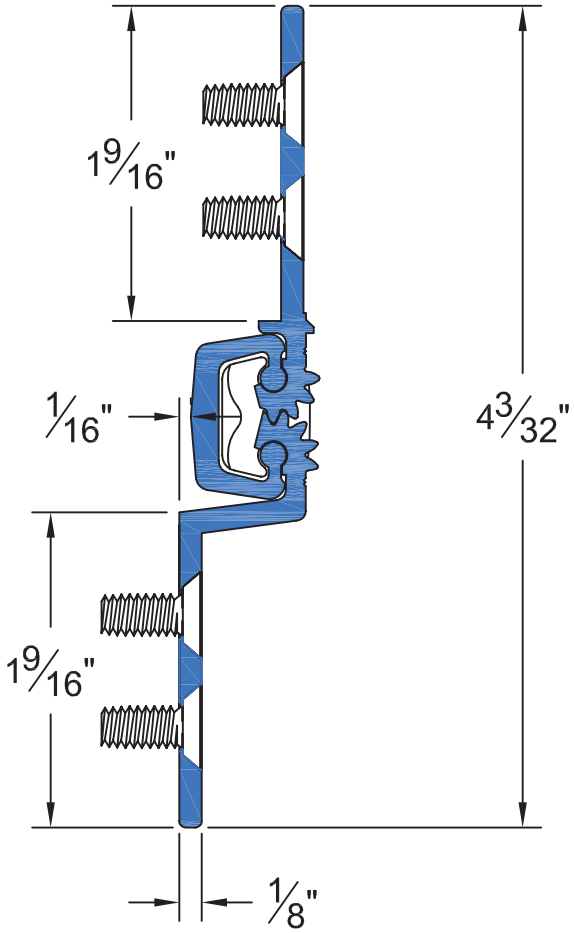

A FRAME WITHOUT A STOP ON THE HINGE MOUNTING SIDE OF THE JAMB MUST BE USED IN CONJUNCTION WITH THE SL71 FOR THE SAFETY FEATURE TO BE EFFECTIVE.

SELECT HINGES™
SELECT Products Limited
9770 Shaver Road Portage, MI 49024
Ph: 800-423-1174 Fax: 800-423-7107
www.select-hinges.com

SL71 SAFETY HINGE